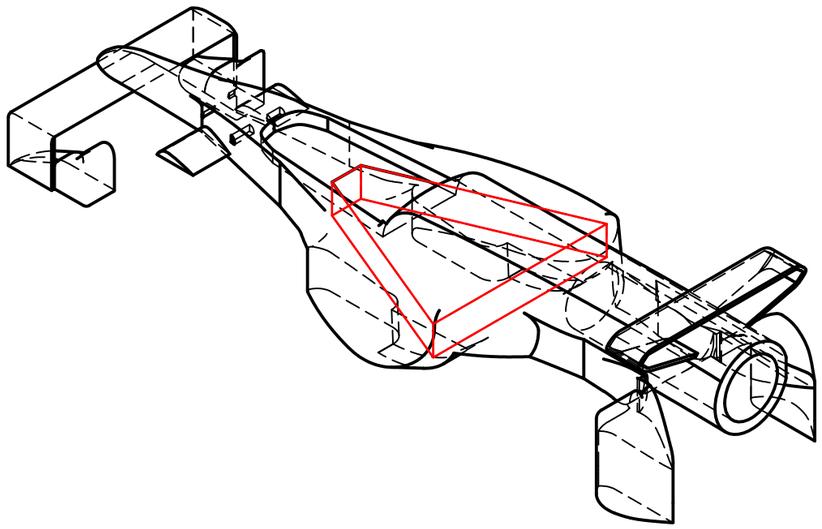

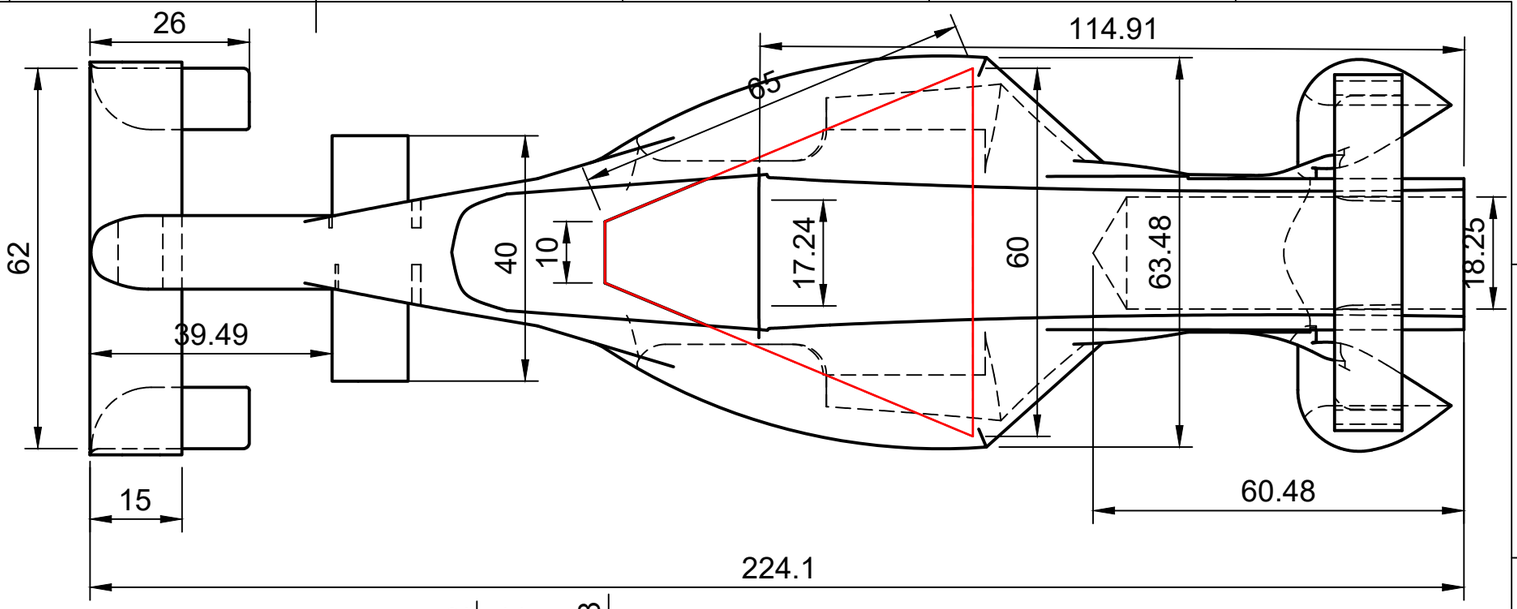

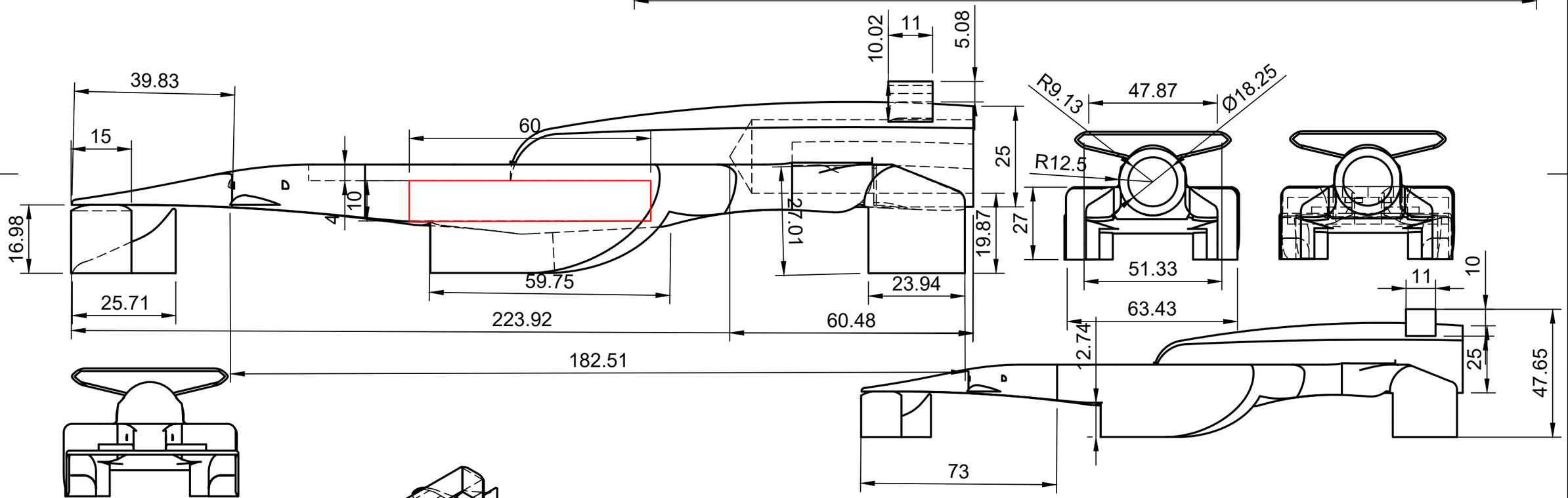

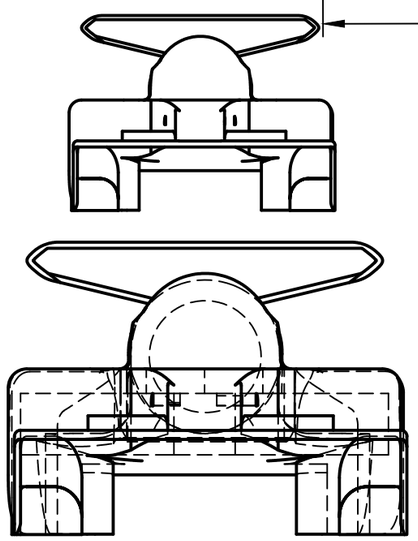

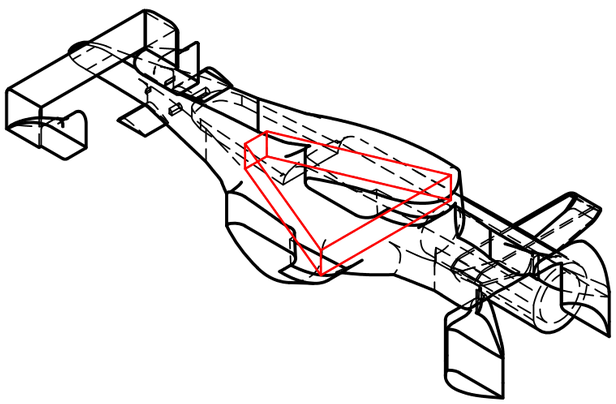

Dept.	Technical reference	Created by	Approved by
		Eve Carruthers 09/11/2025	
		Document type: Engineering Drawings	Document status: Ready for Submission
		Title: ER1	DWG No.: #03
			Rev. / Date of issue: 09/11/2025 / Sheet: 1/1